Effective Date: May 20, 2011
Revision -

GSFC JPSS CMO
December 6, 2011
Released

Joint Polar Satellite System (JPSS) Ground Project
Code 474
474-00060

Joint Polar Satellite System (JPSS) Operational Algorithm Description VIIRS NCC Imagery EDR

For Public Release

The information provided herein does not contain technical data as defined in the International Traffic in Arms Regulations (ITAR) 22 CFC 120.10. This document has been approved For Public Release to the NOAA Comprehensive Large Array-data Stewardship System (CLASS).

National Aeronautics and Space Administration

Goddard Space Flight Center
Greenbelt, Maryland

Check the JPSS MIS Server at https://jpssmis.gsfc.nasa.gov/frontmenu_dsp.cfm to verify that this is the correct version prior to use.

This page intentionally left blank.

Joint Polar Satellite System (JPSS) Operational Algorithm Description VIIRS NCC Imagery EDR

JPSS Electronic Signature Page

Prepared By:

Neal Baker
JPSS Data Products and Algorithms, Senior Engineering Advisor
(Electronic Approvals available online at (https://jpssmis.gsfc.nasa.gov/mainmenu_dsp.cfm)

Approved By:

Heather Kilcoyne
DPA Manager
(Electronic Approvals available online at (https://jpssmis.gsfc.nasa.gov/mainmenu_dsp.cfm)

Goddard Space Flight Center
Greenbelt, Maryland

This page intentionally left blank.

Preface

This document is under JPSS Ground AERB configuration control. Once this document is approved, JPSS approved changes are handled in accordance with Class I and Class II change control requirements as described in the JPSS Configuration Management Procedures, and changes to this document shall be made by complete revision.

Any questions should be addressed to:

JPSS Ground Project Configuration Management Office
NASA/GSFC
Code 474
Greenbelt, MD 20771

This page intentionally left blank.

Change History Log

Revision	Effective Date	Description of Changes (Reference the CCR & CCB/ERB Approve Date)
Original	05/20/2011	**474-CCR-11-0076:** This version baselines D36814, Operational Algorithm Description (OAD) for VIIRS NCC Imagery EDR, Rev B, dated 05/26/2010, as a JPSS document, version Rev –. This is the version that was approved for NPP launch. Per NPOESS CDFCB - External, Volume V – Metadata, doc number D34862-05, this has been approved for Public Release into CLASS. This CCR was approved by the JPSS Algorithm ERB on May 20. 2011.

This page intentionally left blank.

Northrop Grumman Space & Mission Systems Corp.
Space Technology
One Space Park
Redondo Beach, CA 90278

Engineering & Manufacturing Development (EMD) Phase
Acquisition & Operations Contract

CAGE NO. 11982

Operational Algorithm Description
VIIRS NCC Imagery EDR
CDRL A032

Document Number: D36814
Document Date: May 26, 2010 **Revision: B**

PREPARED BY:

Stephen Mills — *Date* *AM&S Imagery EDR Lead*	Paul D. Siebels — 26 May 2010 — *Date* *IDPS PRO SW Manager*

ELECTRONIC APPROVAL SIGNATURES:

Roy Tsugawa — *Date* *A&DP Lead & ACCB Chair*	Stephen E. Ellefson — 26 May 2010 — *Date* *IDPS Processing SI Lead*
Bob Hughes — *Date* *A&DP Deputy & ARB Chair*	

Prepared by
Northrop Grumman Space Technology
One Space Park
Redondo Beach, CA 90278

Under
Contract No. F04701-02-C-0502

Prepared for
Department of the Air Force
NPOESS Integrated Program Office
C/O SMC/CIK
2420 Vela Way, Suite 1467-A8
Los Angeles AFB, CA 90245-4659

DISTRIBUTION STATEMENT F: Distribution statement "F" signifies that further dissemination should only be made as directed by the controlling DoD Office (NPOESS IPO). Ref DODD 5230.24.

Northrop Grumman Space & Mission Systems Corp.
Space Technology
One Space Park
Redondo Beach, CA 90278

NORTHROP GRUMMAN

Raytheon

Revision/Change Record

Document Number D36814

Revision	Document Date	Revision/Change Description	Pages Affected
---	3-31-03	Initial Release.	All
A1	7-28-03	Changes to algorithm as a result of integrating into IPO model for IDPS.	All
A2	8-19-03	Changes to algorithm as a result of optimizations.	All
A3	9-24-03	Updated to include unit test procedures and code completion results.	All
A4	11-5-03	Updated to reflect comments from the ERB.	All
A5	2-5-04	Updated to list units in input and output tables, ERB updates.	All
A6	5-18-04	ITAR statement & footers replaced by Commerce Destination Control Statement & footers, added System Specification Number to cover page, added DPIS ICD, deleted DFCB.	All
A7	5-11-05	Reflects NGST comment corrections plus inserted new logo and updated upper right header date, title/signature page dates, Revision/Change Record.	All
A8	1-08-07	Updated to reflect changes per ECR-480: mapping VIIRS NCC Imagery to the GTM projection and updated upper right header date, title/signature page dates, Revision/Change Record.	All
A9	4-10-07	Updated wording of Detailed Algorithm description, updated quality flag section, updated to new logo.	All
A10	5-3-07	Modified paragraph 4.1 to reflect VIIRS DNB geo is now in degrees.	All
A11	5-18-07	Delivered to NGST.	All
A12	10-29-07	Updated for code changes made under ECR-547.	All
A13	11-21-07	Changes made to OAD based on comments from NGST. Delivered to NGST.	All
A14	5-27-08	Reformatted to conform to D41851. Updated data quality notification section.	All
A15	9-15-08	Updated Graceful Degradation. New cover sheet, update references, acronym list, prepare for peer review. Delivered to NGST. Accept all changes after delivery.	All
A16	3-18-09	Update for SDRL comments. Prepare OAD for TIM	All
A	4-15-09	Incorporated TIM comments. Prepared for ARB/ACCB. ECR A-232 and 391C	All
B1	6-10-09	Incorporated changes as per Tech Memo NP-EMD-2009.510.0014 Also updated reference document Table 1 and reference source-code Table 2	1,2,5,8,9
B2	8-31-09	Updated reference document Table 1 and reference source-code Table 2 for Tech Memo NP-EMD-2009.510.0013	1,2
B3	12-01-09	Updated OAD for RFA Nos. 292, 293, 298 & 299,; as well as updated new Subcontract number on title page.	All
B	5-26-10	Prepared for TIM/ARB/ACCB. ECR A-308	All

Table of Contents

1.0 INTRODUCTION 1
1.1 Objective 1
1.2 Scope 1
1.3 References 1
1.3.1 Document References 1
1.3.2 Source Code References 2
2.0 ALGORITHM OVERVIEW 3
2.1 Near Constant Contrast Imagery Description 4
2.1.1 Interfaces 4
2.1.1.1 Inputs 4
2.1.1.2 Outputs 5
2.1.2 Algorithm Processing 7
2.1.2.1 Main Module – IM_main 9
2.1.2.2 Compute Solar Gain (IM_solar) 9
2.1.2.3 Compute Lunar Gain (IM_lunar) 9
2.1.3 Graceful Degradation 9
2.1.3.1 Graceful Degradation Inputs 9
2.1.3.2 Graceful Degradation Processing 9
2.1.3.3 Graceful Degradation Outputs 9
2.1.4 Exception Handling 9
2.1.5 Data Quality Monitoring 10
2.1.6 Computational Precision Requirements 10
2.1.7 Algorithm Support Considerations 10
2.1.8 Assumptions and Limitations 10
2.1.8.1 Assumptions 10
2.1.8.2 Limitations 10
3.0 GLOSSARY/ACRONYM LIST 11
3.1 Glossary 11
3.2 Acronyms 13
4.0 OPEN ISSUES 14

List of Figures

Figure 1. Processing Chain Associated with VIIRS NCC Imagery EDR.....3
Figure 2. IPO Model Interface to INF and DMS.....4
Figure 3. Generate NCC VIIRS Imagery EDR Level 2 Data Flow Diagram 8
Figure 4. Derive NCC Imagery Level 3 Data Flow Diagram.....8

List of Tables

Table 1. Reference Documents.....1
Table 2. Source Code References 2
Table 3. NCC Imagery EDR Inputs 4
Table 4. Imagery EDR Output File Content.....5
Table 5. Imagery GEO File Content 6
Table 6. Imagery EDR and GEO Pixel-level Quality Flag Bits and Description.....6
Table 7. Imagery GEO Granule-level Quality Flag Bits and Description 7
Table 8. Glossary.....11
Table 9. Acronyms 13
Table 10. List of OAD TBD/TBR.....14

1.0 INTRODUCTION

1.1 Objective

The purpose of the Operational Algorithm Description (OAD) document is to express, in computer-science terms, the remote sensing algorithms that produce the National Polar-Orbiting Operational Environmental Satellite System (NPOESS) end-user data products. These products are individually known as Raw Data Records (RDRs), Temperature Data Records (TDRs), Sensor Data Records (SDRs) and Environmental Data Records (EDRs). In addition, any Intermediate Products (IPs) produced in the process are also described in the OAD.

The science basis of an algorithm is described in a corresponding Algorithm Theoretical Basis Document (ATBD). The OAD provides a software description of that science as implemented in the operational ground system -- the Data Processing Element (DPE).

The purpose of an OAD is two-fold:

1. Provide initial implementation design guidance to the operational software developer.
2. Capture the “as-built” operational implementation of the algorithm reflecting any changes needed to meet operational performance/design requirements.

An individual OAD document describes one or more algorithms used in the production of one or more data products. There is a general, but not strict, one-to-one correspondence between OAD and ATBD documents.

1.2 Scope

The scope of this document is limited to the description of the core operational algorithm(s) required to create the VIIRS Near Constant Contrast (NCC) EDR. The theoretical basis for this algorithm is described in Section 3.2.3 of the VIIRS Imagery Products Algorithm Theoretical Basis Document (ATBD), D43767.

1.3 References

1.3.1 Document References

The science and system engineering documents relevant to the algorithm described in this OAD are listed in Table 1.

Table 1. Reference Documents

Document Title	Document Number/Revision	Revision Date
VIIRS Imagery Products Algorithm Theoretical Basis Document (ATBD)	D43767 Rev. A	8 Jan 2008
VIIRS Build SDR Module Level Software Architecture	Y2479 Ver. 5 Rev. 3	Mar 2002
NPP EDR Production Report	D37005 Rev. D	11 Feb 2009
EDR Interdependency Report	D36385 Rev. E	28 Jan 2009
NPP Mission Data Format Control Book (MDFCB)	D48190-01 Rev. B	03 Sep 2009
CDFCB-X Volume I - Overview	D48190-01 Rev F	08 Dec 2009
CDFCB-X Volume II – RDR Formats	D34862-01 Rev. D	03 Jun 2009
CDFCB-X Volume III – SDR/TDR Formats	D34862-02 Rev. E	09 Dec 2009
CDFCB-X Volume IV Part 1 – IP/ARP/GEO Formats	D34862-03 Rev. E	09 Dec 2009

Document Title	Document Number/Revision	Revision Date
CDFCB-X Volume IV Part 2 – Atmospheric, Clouds, and Imagery EDRs	D34862-04-01 Rev. E	09 Dec 2009
CDFCB-X Volume IV Part 3 – Land and Ocean/Water EDRs	D34862-04-02 Rev. E	09 Dec 2009
CDFCB-X Volume IV Part 4 – Earth Radiation Budget EDRs	D34862-04-03 Rev. E	09 Dec 2009
CDFCB-X Volume V - Metadata	D34862-04-04 Rev. F	09 Dec 2009
CDFCB-X Volume VI – Ancillary Data, Auxiliary Data, Reports, and Messages	D34862-05 Rev. H	09 Dec 2009
CDFCB-X Volume VII – NPOESS Downlink Formats	D34862-06 Rev. C	08 Dec 2009
CDFCB-X Volume VIII – Look Up Table Formats	D34862-07-01 Rev. C	09 Dec 2009
NPP Command and Telemetry (C&T) Handbook	D568423 Rev. C	30 Sep 2008
VIIRS Imagery Interface Control Document	Y2489 Ver. 5 Rev. 3	May 2002
VIIRS Imagery Unit Level Detailed Design	Y2505 Ver. 5 Rev. 3	May 2002
VIIRS Imagery Module Data Dictionary	Y3266 Ver. 5 Rev. 3	May 2002
VIIRS Imagery Unit Test Report	D36818 Ver. 1	Mar 2003
VIIRS Radiometric Calibration Component Detailed Design	Y2490 Ver. 5 Rev. 4	30 Sep 2004
Data Processor Inter-Subsystem Interface Control Document (DPIS ICD)	D35850 Rev. Y	03 Feb 10
D35836_G_NPOESS_Glossary	D35836 Rev. G	10 Sep 2008
D35838_G_NPOESS_Acronyms	D35838 Rev. G	10 Sep 2008
OPERATIONAL ALGORITHM DESCRIPTION DOCUMENT FOR VIIRS Ground Track Mercator (GTM) IMAGERY EDR	D42815 Rev. A	13 Mar 2009
OPERATIONAL ALGORITHM DESCRIPTION DOCUMENT FOR VIIRS GEOLOCATION (GEO) SENSOR DATA RECORD (SDR) and CALIBRATION (CAL) SDR	D41868 Rev. A11	22 Feb 2008
Processing SI Common IO Design	DD60822-IDP-011 Rev. A	21 June 2007
NGST/SE technical memo – NPP_VIIRS_GTM_Imagery_Handling_of_Bad_Detector_Data_Rev_A	NP-EMD.2006.510.0079 Rev. A	16 Nov 2006
NGAS/AM&S technical memo – NCC Operational Algorithm Document Update	NP-EMD-2009.510.0014	7 Apr 2008
NGAS/AM&S technical memo – NCC Code and LUT Update	NP-EMD.2009.510.0013	7 Apr 2008

1.3.2 Source Code References

The science and operational code and associated documentation relevant to the algorithms described in this OAD are listed in Table 2.

Table 2. Source Code References

Reference Title	Reference Tag/Revision	Revision Date
VIIRS Imagery Unit Test Data	Rev. ---	31 Mar 2003
VIIRS NCC Imagery EDR science-grade software (original reference source)	Ver. 5.1	31 Mar 2003
VIIRS NCC Imagery EDR operational software (OAD Rev A12)	Build I1.5.x.1	Oct 2007
NPP_VIIRS_GTM_Imagery_Handling_of_Bad_Detector_Data	NP-EMD.2006.510.0079 Rev A	16 Nov 2006
NGAS/AM&S technical memo – NCC Operational Algorithm Document Update	B1.5 Sensor Characterization (OAD Rev B1)	10 Jun 09
NGAS/AM&S technical memo – NCC Code and LUT Update	B1.5 Sensor Characterization/SC3 (OAD Rev B2)	31 Aug 2009
RFA closure (No code updates)	OAD Rev B3	01 Dec 2009
ACCB (no code updates)	OAD Rev B	26 May 2010

2.0 ALGORITHM OVERVIEW

This section describes the operational algorithm that produces VIIRS sensor NCC Imagery EDR. The NCC product is created from the Day/Night Band (DNB) SDR, where the DNB data is mapped to the Coarse GTM map and then processed in such a way to minimize the apparent transition in radiance across the terminator. The VIIRS NCC Imagery EDR is computed after the SDR process is complete. Figure 1 illustrates this processing relationship.

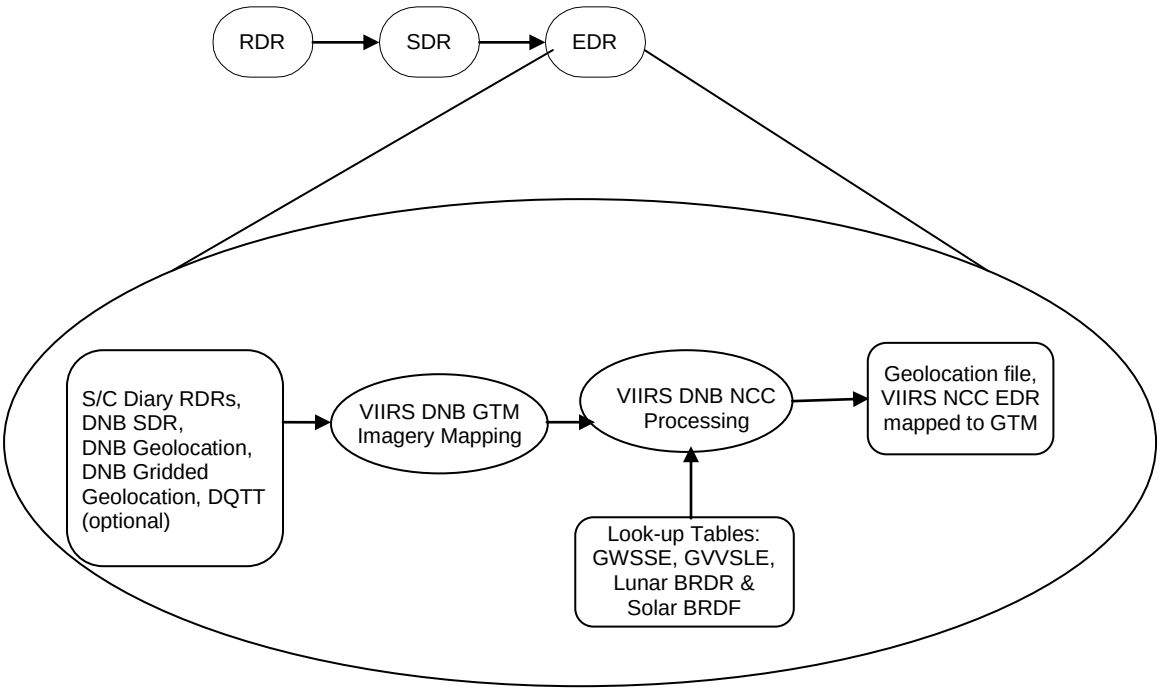

Figure 1. Processing Chain Associated with VIIRS NCC Imagery EDR

NCC Visible Imagery is derived from the DNB measured in regions with solar illumination in daytime, with lunar illumination at night, or near the terminator (twilight) region. Due to the significant dynamic range of solar and lunar irradiance on the earth, a three-stage Charge Coupled Device (CCD) sensor is designed to record the radiance in this region. The individual detectors in the three stages of the CCD are used to record daytime, twilight and nighttime radiance. The SDR for this band consists of a single set of radiance data containing all three stages merged to include all illumination conditions. DNB calibration provides calibrated Top of Atmosphere (TOA) radiance over a dynamic range of 3×10^{-9} to 2×10^{-2} W/cm2/sr. The NCC algorithm converts the TOA radiance to an imagery product by removing variation due to the solar and lunar source irradiance for each pixel. The algorithm preserves heritage from the Operational Linescan System (OLS) Gain Management Algorithm (GMA) using Look-Up Tables (LUTs) designed to mimic the GMA.

The ATBD discusses removal of solar and lunar path radiance due to aerosol scattering during NCC Imagery production in order to improve quality of the NCC Imagery product, but rejects this approach because of limitations of currently existing radiative transfer models. Therefore, there is no aerosol correction algorithm in the current algorithm. Algorithms that do this in the original code were removed because they were impractical to implement.

2.1 Near Constant Contrast Imagery Description

2.1.1 Interfaces

The VIIRS NCC Imagery algorithm is initiated by an IDPS Infrastructure (INF) subsystem Software Item (SI) to process the data. This INF SI provides tasking information to the algorithm indicating which granule to process. The Data Management Subsystem (DMS) SI provides data storage and retrieval capability. A library of C++ classes is used to implement SI interfaces, depicted in Figure 2.

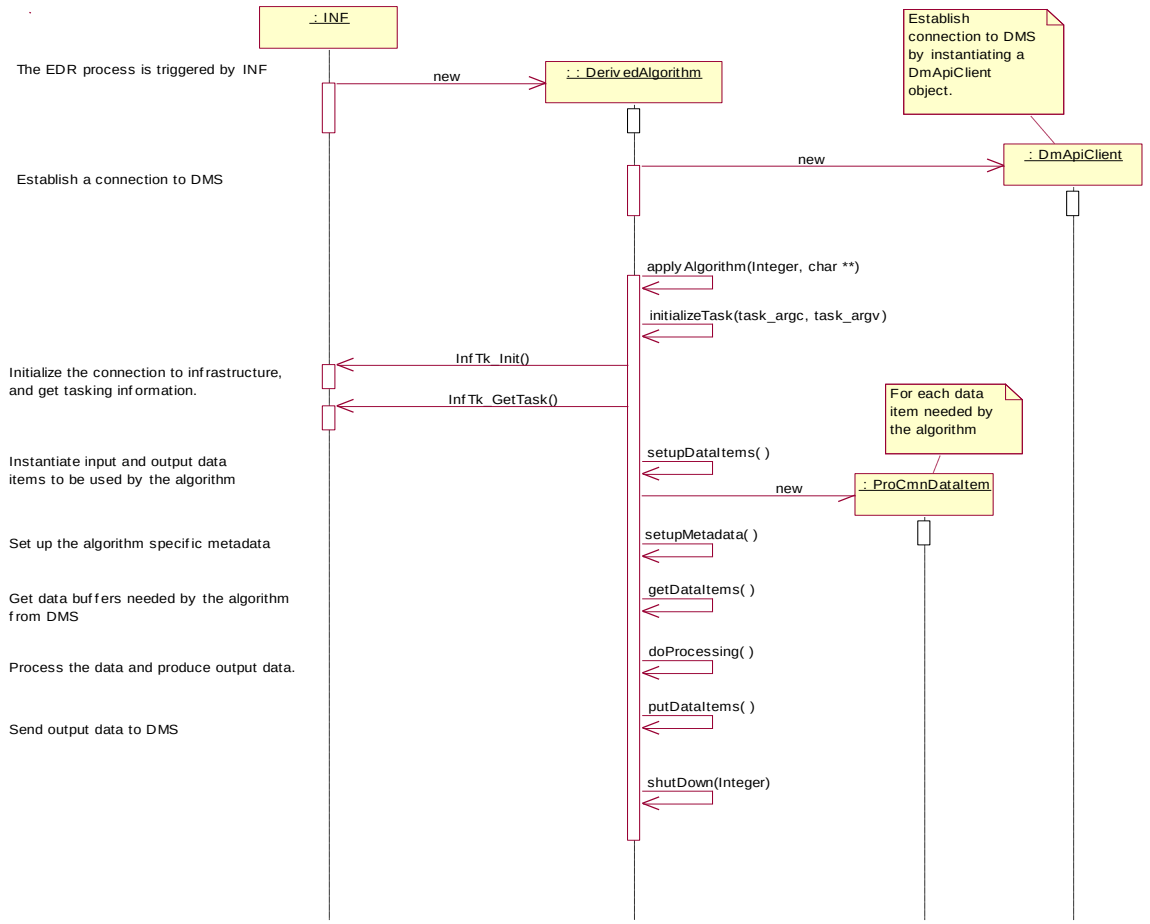

Figure 2. IPO Model Interface to INF and DMS

2.1.1.1 Inputs

Computing the VIIRS NCC Imagery EDR requires several types of data. See Table 3 for a list of inputs. Refer to the CDFBC-X, D34862, for a detailed description of the inputs.

Table 3. NCC Imagery EDR Inputs

Input	Type	Description	Units / Valid Range

Input	Type	Description	Units / Valid Range
VIIRS DNB SDR	Float32	VIIRS Calibrated TOA Radiances for DNB.	W/cm²/sr For data range, refer to VIIRS Radiometric Calibration Document, Y2490
VIIRS DNB Geolocation File	Float32	Earth location for each satellite view point as well as solar, lunar, and view geometry.	radians For data range, Refer to the VIIRS SDR OAD, D41868
VIIRS Day Night Band Grid SDR	Float32	Grid row and column values for every pixel in the granule and the granule MDS.	degrees For data range, refer to the VIIRS SDR OAD, D41868
Solar GVVSE Look-Up Table	Float32	LUT containing gain values for the solar signal as a function of solar zenith angle in the DNB (see CDFCB-X, Volume VIII).	Degrees, unitless
Solar BRDF Look-Up Table	Float32	LUT providing the anisotropic reflectance factors for the solar signal in the DNB as a function of the illumination angles and the sensor zenith angles. Note that this is not strictly speaking a true BRDF, because it does not contain units of inverse steradians. The actual BRDF can be determined from this LUT by dividing by pi.	Degrees, unitless
Lunar GVVSE Look-Up Table	Float32	LUT containing gain values for the lunar signal as a function of lunar zenith angle in the DNB (see CDFCB-X, Volume VIII).	Degrees, unitless
Lunar BRDF Look-Up Table	Float32	LUT providing the anisotropic reflectance factors for the lunar signal in the DNB as a function of the illumination angles and the sensor zenith angles. Note that this is not strictly speaking a true BRDF, because it does not contain units of inverse steradians. The actual BRDF can be determined from this LUT by dividing by pi.	Degrees, unitless
Lunar Phase Look-up Table	Float32	LUT providing the lunar radiance as a function of lunar phase angles.	Degrees, W/cm²/sr
Threshold Look-up Table	Float32	LUT providing thresholds for the algorithm.	Radiances (W/cm²/sr), Angles (Degrees)
Data Quality Threshold Table	IngMsdThresholds_DQTT	Reports erroneous pixels through a DQN. Performs a bitmask tests on quality flag bits 0-1 for red condition (NCC Imagery quality poor).	CDFBC-X, D34862

2.1.1.2 Outputs

The VIIRS NCC Imagery algorithm produces a data item containing calculated NCC Imagery values and a data item containing geolocation data. Table 4 contains the imagery EDR output file content. Table 5 contains the imagery GEO file content. Refer to the CDFBC-X, D34862, for a detailed description of the outputs. The equation for applying the scale and offset parameters to scaled fields is: $OUTPUT_{float32} = OUTPUT_{uint16} * scale_{float32} + offset_{float32}$

Table 4. Imagery EDR Output File Content

Output	Type	Description	Units / Valid Range
image	UInt16 * [771 * 4121]	Two-dimensional array containing the scaled NCC imagery for each DNB pixel in the granule.	Unitless / 0 - 65535
Pixel quality	UInt8 * [771 * 4121]	Two-dimensional array containing pixel-level quality flags for each DNB pixel in the granule.	Unitless Refer to Table 6 for a detailed description
nccScale	Float32	The scale value for the NCC. This can be found by subtracting the min NCC range	Unitless

Output	Type	Description	Units / Valid Range
		value from the max and dividing this result by 65000.	
nccOffset	Float32	The offset value is the minimum acceptable NCC range value.	Unitless
Data Quality Notification	ProCmnDQN DataType	This optional output item is only produced if an erroneous pixel is found during processing. It contains granule-level data quality information.	CDFBC-X, D34862

Table 5. Imagery GEO File Content

Output	Type	Description	Units / Valid Range
row time	UInt64	One-dimensional array containing row time values (IET—microseconds since 1 Jan 1958).	Microseconds / 1483228832000000 - 2272147232000000
latitude	UInt8	Two-dimensional array containing latitude values.	Degrees / -90 - 90
longitude	UInt8	Two-dimensional array containing Longitude values.	Degrees / -180 - 180
Solar zenith	Float64	Two-dimensional array containing solar zenith values.	Degrees / 0 - 180
Solar azimuth	Float32	Two-dimensional array containing Solar azimuth values.	Degrees / -180 - 180
Satellite zenith	Float32	Two-dimensional array containing satellite zenith values.	Degrees / 0 - 180
Satellite azimuth	Float32	Two-dimensional array containing satellite azimuth values.	Degrees / -180 - 180
Height	Int16	Difference between ellipsoid and geoid height	Meters / -150 - 150
Satellite range	Float32	Two-dimensional array containing satellite range values.	Meters / 820,000 – 1,900,000
Pixel quality flag	UInt8	Two-dimensional array containing pixel-level quality flags.	Unitless
Granule quality	UInt8	A 1byte flag containing granule-level quality flags.	Unitless Refer to Table 7 for a detailed description
SDR row	UInt16	Two-dimensional array containing row indexes of the SDR Imagery product which produced the given pixel.	Unitless
SDR Column	UInt16	Two-dimensional array containing column indexes of the SDR Imagery product which produced the given pixel.	Unitless
Moon Illumination	Float32	Fraction of moon illuminated for the granule.	Unitless / 0.0 – 1.0
Lunar zenith	Float32	Two-dimensional array containing lunar zenith values.	Degrees / 0 - 180
Lunar azimuth	Float32	Two-dimensional array containing lunar azimuth values.	Degrees / -180 - 180

Table 6. Imagery EDR and GEO Pixel-level Quality Flag Bits and Description

Flag Name	Data Type	Description	Values
Imagery Quality	2 bits	Pixel quality as determined by the SDR Calibration Quality. There is no dead pixel replacement for NCC imagery.	0) Good 1) Poor 2) No Calibration
Saturated Pixel	1 bit	Indicates the level of pixel saturation.	0) Not Saturated 1) Saturated
Missing data	2 bits	Data required for calibration processing is not available for processing.	0) All data present 1) EV RDR data

Flag Name	Data Type	Description	Values
			missing 2) Cal data (SV, CV, SD, etc) missing 3) Thermistor data missing
Out of Range	1 bit	Calibrated pixel value outside of LUT threshold limits.	0) All data within range 1) Radiance out of range
NCC Error	1 bit	Indicates an error occurred when processing NCC algorithm	0 - False 1 - True

Table 7. Imagery GEO Granule-level Quality Flag Bits and Description

Flag Name	Data Type	Description	Values
Solar Eclipse	1 bit	Solar eclipse present in granule	0) No Eclipse 1) Eclipse
Lunar Eclipse	1 bit	Lunar eclipse present in granule	0) No Eclipse 1) Eclipse

2.1.2 Algorithm Processing

The purpose of the VIIRS NCC Imagery Unit is to derive NCC Imagery for each pixel of the DNB Visible imagery (mapped to the Coarse GTM map) and to write the VIIRS NCC Imagery EDR. The NCC processing specific source code is written in FORTRAN 90 with the interface to IDPS written in C++. Each of the following routines is presented with a brief description of their function.

NCC Imagery is derived for each DNB pixel, using the VIIRS DNB SDR and LUTs as input data files. The class responsible for retrieving data from and putting data into DMS is contained in the file ProEdrViirsGtmNccImagery.cpp.

The program IM_main.f contains all NCC processing specific subroutines. Figure 3 depicts a Level 2 data flow diagram for the VIIRS NCC Imagery EDR and Figure 4 illustrates the process of how NCC Imagery is produced from the DNB SDR. Here both Moon and Sun DNB scene illuminations are identified with computation of radiance from each source. These radiance contributions are combined into a total source radiance to compute the NCC Imagery product.

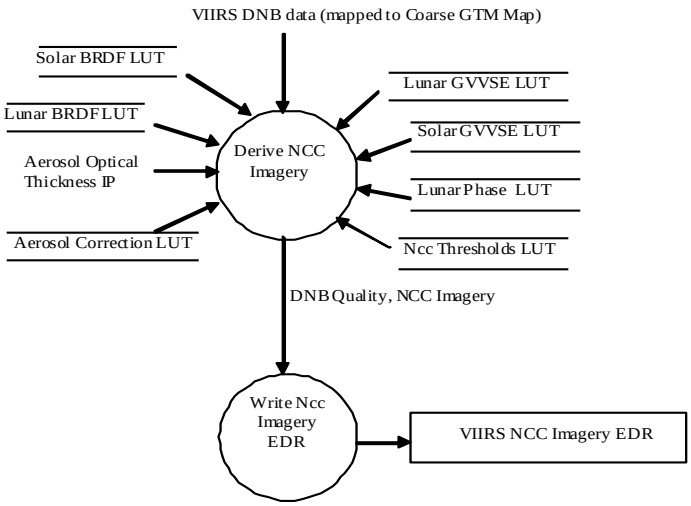

Figure 3. Generate NCC VIIRS Imagery EDR Level 2 Data Flow Diagram

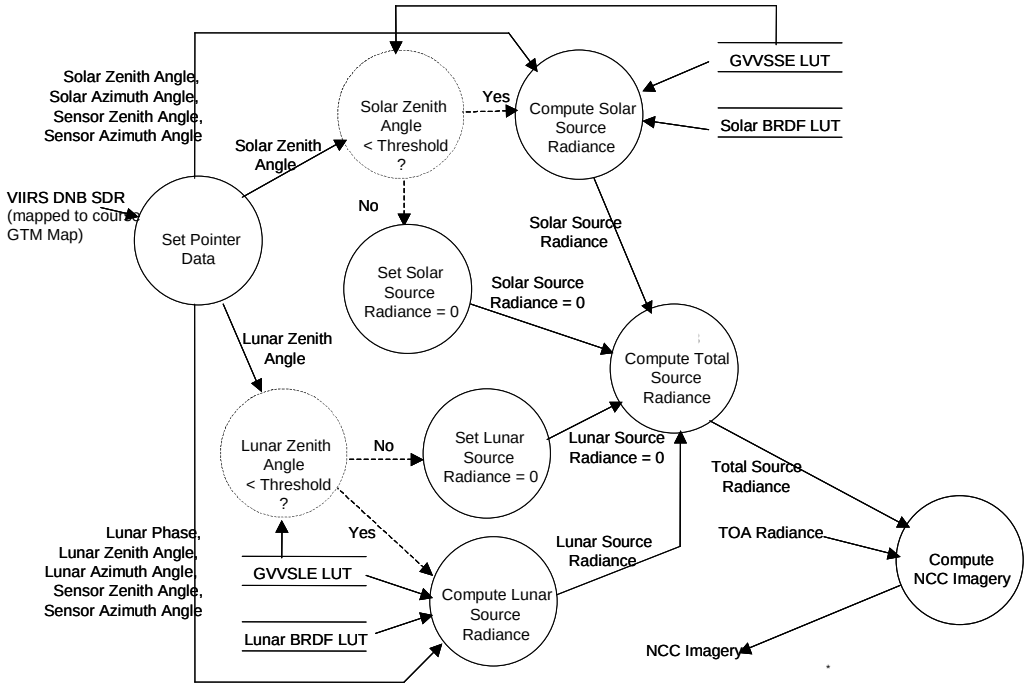

Figure 4. Derive NCC Imagery Level 3 Data Flow Diagram

ProEdrViirsGtmNccImagery is the derived algorithm for the NCC Imagery algorithm. It is a subclass of the ProEdrViirsGtmImagery class which is, in turn, a subclass of the ProCmnAlgorithm class. This derived algorithm class creates a list of input data items read from DMS, performs the GTM mapping, and passes required data into the NCC algorithm. An output data item is written to DMS once both of the algorithms finish processing this data. The GTM algorithm calculates the GTM geolocation and mapping information by calling the createGTM() method. Next, this class copies the DNB SDR radiance data into a temporary buffer and passes the temporary buffer into the NCC Imagery IM_main routine. All further

references to “DNB pixel” or “DNB scene” in this document are referring to this temporary buffer of DNB radiances which has been mapped to the GTM space. See the VIIRS Ground Track Mercator Imagery EDR OAD, referenced in Table 1, for more information.

2.1.2.1 Main Module – IM_main

This routine is the main driver for the NCC Imagery EDR. This program generates NCC Imagery from DNB data using OLS heritage, current atmospheric data, solar, lunar and sensor geometry. The solar and lunar radiances are computed for each DNB pixel. Once this is done, the “pseudo albedo” (this is not a true albedo) for each pixel is calculated for the NCC Imagery.

2.1.2.2 Compute Solar Gain (IM_solar)

This subroutine calculates Solar Gain and Solar Bi-directional Reflectance Distribution Function (BRDF) at each DNB pixel. The Solar Gain LUT is interpolated in solar zenith angle to estimate the gain factor for every pixel in the DNB scene. The Solar BRDF LUT is interpolated on solar zenith angle, sensor zenith angle, and relative azimuth to estimate the value of the anisotropic reflectance factor for every pixel in the DNB scene.

2.1.2.3 Compute Lunar Gain (IM_lunar)

This subroutine calculates Lunar Gain and Lunar BRDF at each DNB pixel. The Lunar Gain LUT is interpolated in lunar zenith angle to estimate the gain factor for every pixel in the DNB scene. The Lunar BRDF LUT is interpolated on lunar phase, lunar zenith angle, sensor zenith angle, and relative azimuth to estimate the value of the anisotropic reflectance factor for every pixel in the DNB scene.

2.1.3 Graceful Degradation

2.1.3.1 Graceful Degradation Inputs

There is one case where input graceful degradation is indicated in the VIIRS NCC Imagery EDR.

1. An input retrieved for the algorithm had its N_Graceful_Degradation metadata field set to YES (propagation).

2.1.3.2 Graceful Degradation Processing

None.

2.1.3.3 Graceful Degradation Outputs

None.

2.1.4 Exception Handling

The VIIRS NCC Imagery Unit software is designed to handle a wide variety of processing problems, including bad and missing data and fatal errors. Any exceptions or errors are reported to IDPS using the appropriate INF Application Program Interface (API). Three possible quality flags (QF) have placeholders in the code for RED (3), GREEN (0) and YELLOW (1), but the YELLOW flags are not used in the current version. Since QFs are passed through from the

SDR, the set of possible QFs is not limited to these three, but is determined by the SDR definition.

Error flag information is written as a QF in the event that processing problems prevent production of useful EDR data for some pixels. The NCC QF (NCC_Qual_Dnb in**Error! Reference source not found.**), however, reflects both the quality of the DNB SDR, as well as the quality of the NCC process. When the NCC algorithm encounters DNB pixels with a green QF from the SDR, but with either the minimum solar zenith angle or minimum lunar zenith angle greater than configurable thresholds, it sets the NCC_QF to RED.

Since the NCC outputs a floating-point number, slightly negative outputs are possible and could, in fact, result from a noisy pixel with very low radiance. A fill value for floating point real values is set to -999.9 to indicate that a value was not computed.

2.1.5 Data Quality Monitoring

Each algorithm uses specific criteria contained in a Data Quality Threshold Table (DQTT) to determine when a Data Quality Notification (DQN) is produced. The DQTT contains the threshold used to trigger the DQN as well as the text contained in the DQN. If a threshold is met, the algorithm stores a DQN in DMS indicating the test(s) that failed and the value of the DQN attribute. For more algorithm specific detail refer to the CDFCB-X, D34862.

2.1.6 Computational Precision Requirements

The NCC algorithm does computations in 32-bit precision float. Despite the large dynamic range of the DNB SDR, double precision is not required. A 32-bit float value is more than sufficient to represent the seven orders of magnitude dynamic range in the radiances.**Error! Reference source not found.Error! Reference source not found.**

Optimization for the Solar and Lunar gain factor is based upon angle values measured in degrees. DNB geolocation angle values input by this process are already in degrees and no conversion from radians is necessary.

2.1.7 Algorithm Support Considerations

Any thresholds used in the algorithm that can be changed on a frequent basis (i.e., referred to as settable parameters) are contained within a DMS algorithm specific thresholds file. The INF and DMS must be running before the algorithm is executed.

2.1.8 Assumptions and Limitations

2.1.8.1 Assumptions

No assumptions are identified at this time.

2.1.8.2 Limitations

No limitations are identified at this time.

3.0 GLOSSARY/ACRONYM LIST

3.1 Glossary

The current glossary for the NPOESS program, D35836_G_NPOESS_Glossary, can be found on eRooms. Table 8 contains those terms most applicable for this OAD.

Table 8. Glossary

Term	Description
Algorithm	A formula or set of steps for solving a particular problem. Algorithms can be expressed in any language, from natural languages like English to mathematical expressions to programming languages like FORTRAN. On NPOESS, an algorithm consists of: 1. A theoretical description (i.e., science/mathematical basis) 2. A computer implementation description (i.e., method of solution) 3. A computer implementation (i.e., code)
Algorithm Configuration Control Board (ACCB)	Interdisciplinary team of scientific and engineering personnel responsible for the approval and disposition of algorithm acceptance, verification, development and testing transitions. Chaired by the Algorithm Implementation Process Lead, members include representatives from IWPTB, Systems Engineering & Integration IPT, System Test IPT, and IDPS IPT.
Algorithm Verification	Science-grade software delivered by an algorithm provider is verified for compliance with data quality and timeliness requirements by Algorithm Team science personnel. This activity is nominally performed at the IWPTB facility. Delivered code is executed on compatible IWPTB computing platforms. Minor hosting modifications may be made to allow code execution. Optionally, verification may be performed at the Algorithm Provider's facility if warranted due to technical, schedule or cost considerations.
EDR Algorithm	Scientific description and corresponding software and test data necessary to produce one or more environmental data records. The scientific computational basis for the production of each data record is described in an ATBD. At a minimum, implemented software is science-grade and includes test data demonstrating data quality compliance.
Environmental Data Record (EDR)	*[IORD Definition]* Data record produced when an algorithm is used to convert Raw Data Records (RDRs) to geophysical parameters (including ancillary parameters, e.g., cloud clear radiation, etc.). *[Supplementary Definition]* EDRs are data records that contain the environmental parameters or imagery generated by the NPOESS system as products deliverable to the user. The NPOESS and NPP required set of EDRs is defined in the NPOESS System Specification. EDRs are generally produced by applying an appropriate set of algorithms to Raw Data Records(RDRs). For specific definitions for each EDR, see the NPOESS System Specification, SY15-0007
Model Validation	The process of determining the degree to which a model is an accurate representation of the real-world from the perspective of the intended uses of the model. [Ref.: DoDD 5000.59-DoD Modeling and Simulation Management]
Model Verification	The process of determining that a model implementation accurately represents the developer's conceptual description and specifications. [Ref.: DoDD 5000.59-DoD Modeling and Simulation Management]
Operational Code	Verified science-grade software, delivered by an algorithm provider and verified by IWPTB, is developed into operational-grade code by the IDPS IPT.
Operational-Grade Software	Code that produces data records compliant with the System Specification requirements for data quality and IDPS timeliness and operational infrastructure. The software is modular relative to the IDPS infrastructure and compliant with IDPS application programming interfaces (APIs) as specified for TDR/SDR or EDR code.

Term	Description
Raw Data Record (RDR)	*[IORD Definition]* Full resolution digital sensor data, time referenced and earth located, with absolute radiometric and geometric calibration coefficients appended, but not applied, to the data. Aggregates (sums or weighted averages) of detector samples are considered to be full resolution data if the aggregation is normally performed to meet resolution and other requirements. Sensor data shall be unprocessed with the following exceptions: time delay and integration (TDI), detector array non-uniformity correction (i.e., offset and responsivity equalization), and data compression are allowed. Lossy data compression is allowed only if the total measurement error is dominated by error sources other than the data compression algorithm. All calibration data will be retained and communicated to the ground without lossy compression. *[Supplementary Definition]* Full resolution, unprocessed digital sensor data, time-referenced with radiometric and geometric calibration coefficients appended, but not applied, to the data. Aggregates (sums or weighted averages) of detector samples are considered to be full resolution data if the aggregation is normally performed to meet resolution and other requirements. Sensor data should be unprocessed with the following exceptions: time delay and integration (TDI), detector array non-uniformity correction (i.e., offset and responsivity equalization), and lossless data compression are allowed. All calibration data will be retained and communicated to the ground without lossy compression. Note that for the real time transmission of raw data to field terminals, lossy compression is allowed. Additionally, reduced resolution is allowed in transmission of raw data to low data rate field terminals.
Retrieval Algorithm	A science-based algorithm used to 'retrieve' a set of environmental/geophysical parameters (EDR) from calibrated and geolocated sensor data (SDR). Synonym for EDR processing.
Science Algorithm	The theoretical description and a corresponding software implementation needed to produce an NPP/NPOESS data product (TDR, SDR or EDR). The former is described in an ATBD. The latter is typically developed for a research setting and characterized as "science-grade".
Science Algorithm Provider	Organization responsible for development and/or delivery of TDR/SDR or EDR algorithms associated with a given sensor.
Science-Grade Software	Code that produces data records in accordance with the science algorithm data quality requirements. This code, typically, has no software requirements for implementation language, targeted operating system, modularity, input and output data format or any other design discipline or assumed infrastructure.
SDR/TDR Algorithm	Scientific description and corresponding software and test data necessary to produce a Temperature Data Record and/or Sensor Data Record given a sensor's Raw Data Record. The scientific computational basis for the production of each data record is described in an Algorithm Theoretical Basis Document (ATBD). At a minimum, implemented software is science-grade and includes test data demonstrating data quality compliance.
Sensor Data Record (SDR)	*[IORD Definition]* Data record produced when an algorithm is used to convert Raw Data Records (RDRs) to calibrated brightness temperatures with associated ephemeris data. The existence of the SDRs provides reversible data tracking back from the EDRs to the Raw data. *[Supplementary Definition]* Full resolution sensor data that are time referenced, earth (GEO) located (or orbit located for in-situ measure-ments), and calibrated by applying the ancillary information including radiometric and geometric calibration coefficients and geo-referencing parameters such as platform ephemeris. These data are processed to sensor units (e.g., radar backscatter cross section, brightness temperature, radiance, etc.)

3.2 Acronyms

The current acronym list for the NPOESS program, D35838_G_NPOESS_Acronyms, can be found on eRooms. Table 9 contains those terms most applicable for this OAD.

Table 9. Acronyms

Acronym	Description
AM&S	Algorithms, Models & Simulations
API	Application Programming Interfaces
ARP	Application Related Product
CDFCB-X	Common Data Format Control Book - External
DMS	Data Management Subsystem
DPIS ICD	Data Processor Inter-subsystem Interface Control Document
DQTT	Data Quality Test Table
GMA	Gain Management Algorithm
IIS	Intelligence and Information Systems
INF	Infrastructure
ING	Ingest
IP	Intermediate Product
LUT	Look-Up Table
MDFCB	Mission Data Format Control Book
NCC	Near Constant Contrast
OLS	Operational Linescan System
PRO	Processing
QF	Quality Flag
SDR	Sensor Data Records
SI	Software Item or International System of Units
TBD	To Be Determined
TBR	To Be Resolved
TOA	Top of the Atmosphere

4.0 OPEN ISSUES

Table 10. List of OAD TBD/TBR

No.	DESCRIPTION	Resolution Date
None		